# busSTRUT Shop Drawing Set

## Express Rows (Large)

### busSTRUT SHOP DRAWING SET (ONLY)

NOT A REPLACEMENT FOR ARCHITECTURAL/ENGINEERING/ ELECTRICAL SPECIFICATIONS. (DEFER TO THEIR DRAWINGS)

### CONTRACTOR RESPONSIBILITIES

CONTRACTOR IS RESPONSIBLE FOR:

1.- FOLLOWING busSTRUT CONFIGURATION MOUNTING POINT RULES.

2.- REFERRING TO ARCHITECTURAL PLANS FOR PLACEMENT OF LIGHTS.

3.- REFERRING TO ELECTRICAL PLANS FOR POWER DISTRIBUTION AND ELECTRICAL CONNECTION REQUIREMENTS.

### CONNECTION TO STRUCTURE

ATTACHMENT FROM busSTRUT SYSTEM TO STRUCTURE MUST BE ENGINEERED AND INSTALLED TO PROPERLY SUPPORT THE ENTIRE SUSPENDED WEIGHT.

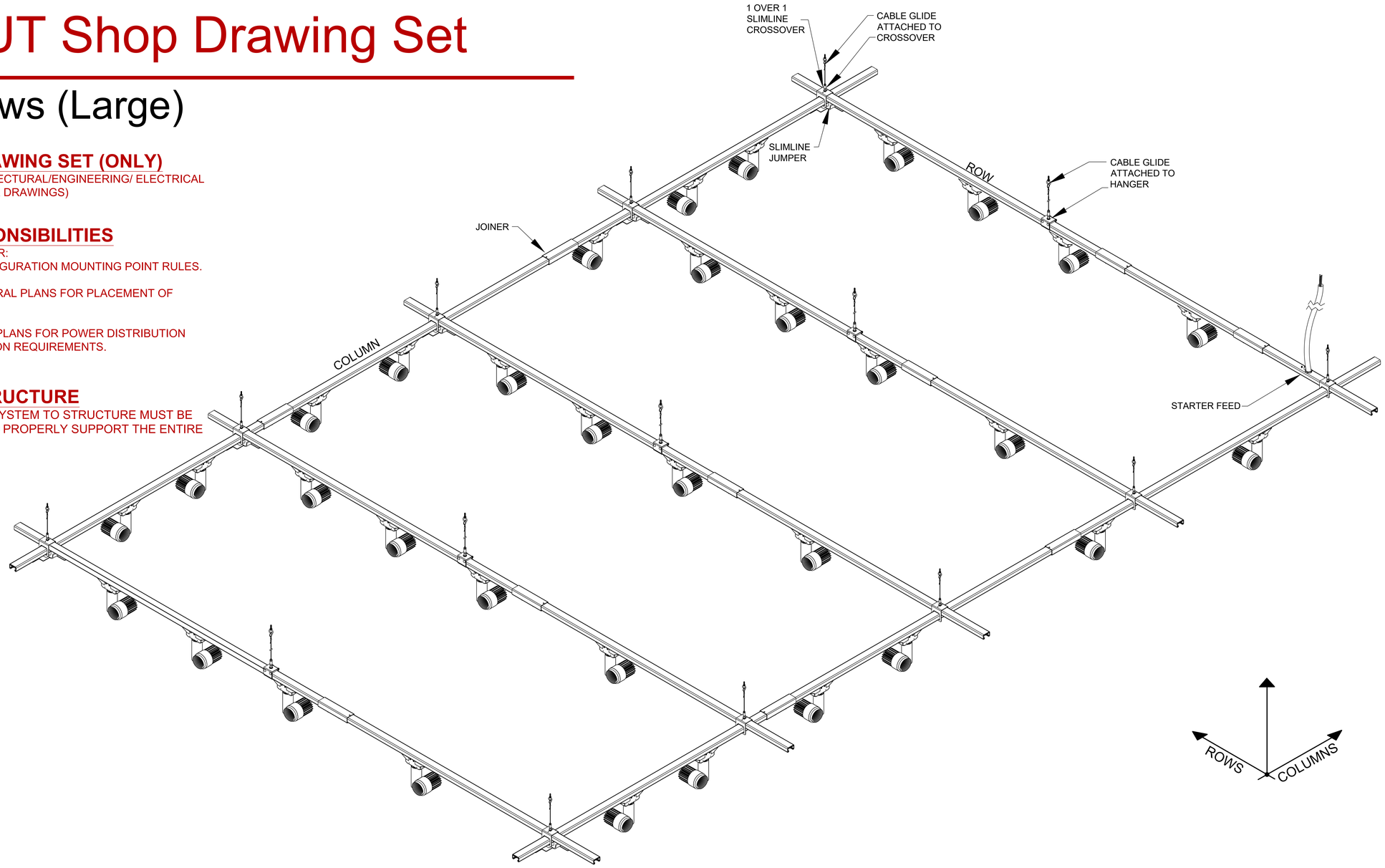


### TABLE OF CONTENTS


| | |
|---|---|
| E-b01<br>E-b02 | Typical Installation Instructions |
| E-b1<br>E-b2 | Lighting Plan, BOM, & Labor Hours<br>Assembly Plan |


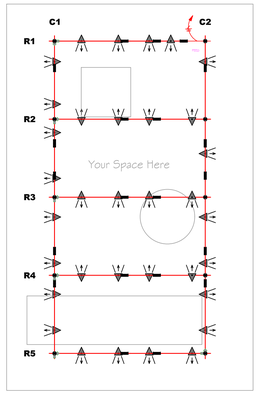


### KEY MOUNTING RULES

Rows are to be mounted on top of Columns.
Crossover sleeve runs with Rows.

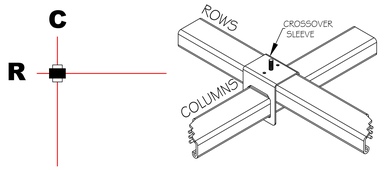


Row

Column

### Legend

- busSTRUT 20 / Single Deck
- 30" Starter Feed
- Joiner
- 1/1 Slimline Crossover
- Slimline Jumper

### APPROVAL


busSTRUT
805 Hilladowne Road
Suite C
Westerville, OH
43081
TEL: 614.933.8695
E-MAIL:
INFO@busSTRUT.COM
WWW.busSTRUT.COM


| | |
|---|---|
| PRINCIPAL IN CHARGE | LARRY GELLERT |
| CHECKED BY | JOHN LOCH |
| DRAWN BY | JOHN LOCH |
| ISSUE DATE | 10/15/2024 |
| ISSUED FOR | BID/REVIEW |

busSTRUT
SHOP DRAWING SET(ONLY)
NOT A REPLACEMENT FOR ARCHITECTURAL / ENGINEERING OR ELECTRICAL DRAWINGS

| NO. | DATE | REVISION DESCRIPTION | BY |
|---|---|---|---|
| | XX-XX-XX | XXXX | XX |

PAPER SIZE: ARCH E (48x36)

NOT TO SCALE

COVER SHEET

# STEP 1

## SUSPENDING busSTRUT

**1**
**SUSPEND CABLES**
(CG-XX)
ATTACH CABLE ASSEMBLY to STRUCTURE
*It is the contractor and/or engineer's responsibility to determine correct connection to structure (beam clamp, etc).

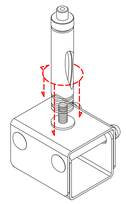

**2**
**ASSEMBLE HANGERS**
(HM-S)
ASSEMBLE HANGERS AND ATTACH CABLE GLIDE

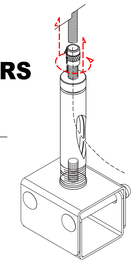

**3**
**ATTACH HANGERS TO CABLES**
(CG-XX)
FEED CABLES THROUGH GLIDE TO ATTACH

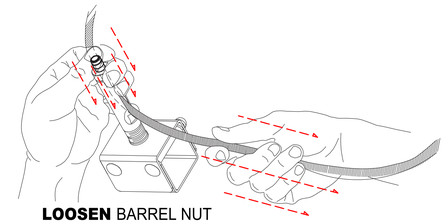

**LOOSEN** BARREL NUT
**PUSH** CABLE THROUGH
**PULL** CABLE FOR SLACK

## SLIDE busSTRUT THROUGH SUSPENDED HANGERS

**Assemble**
**Create cable suspended runs of busSTRUT**. *Usually, these are running perpendicular to structural joists.* **Insert** busSTRUT lengths through hangers/crossovers working from **FINISHED HEIGHT**.

*It is the contractor and/or engineer's responsibility to determine correct connection to structure (beam clamp, etc).

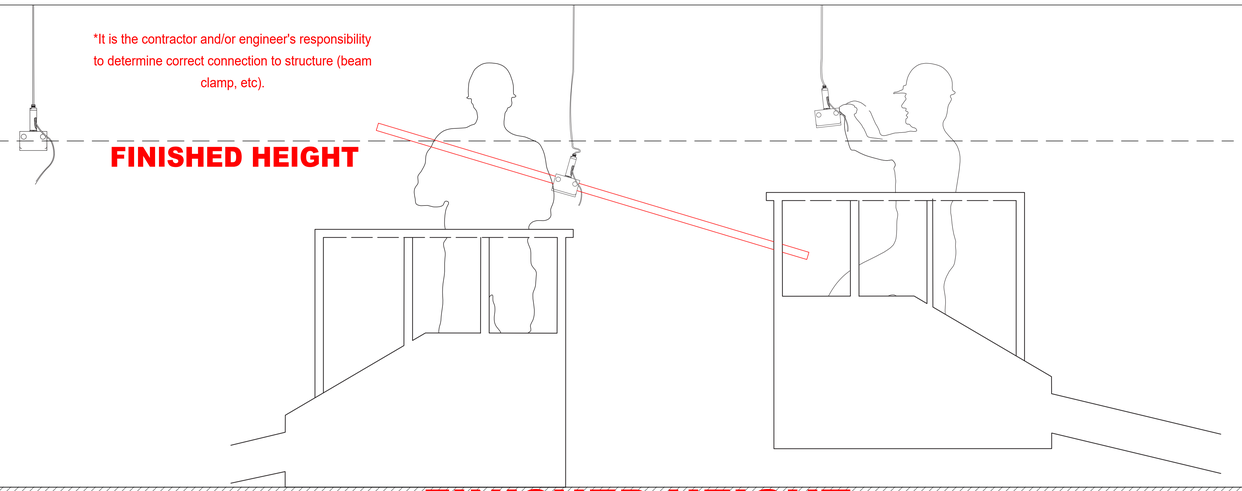


**BE SURE TO FOLLOW busSTRUT MOUNTING RULES (SEE busSTRUT shop drawings)**

## LEVEL busSTRUT AND TRIM CABLE

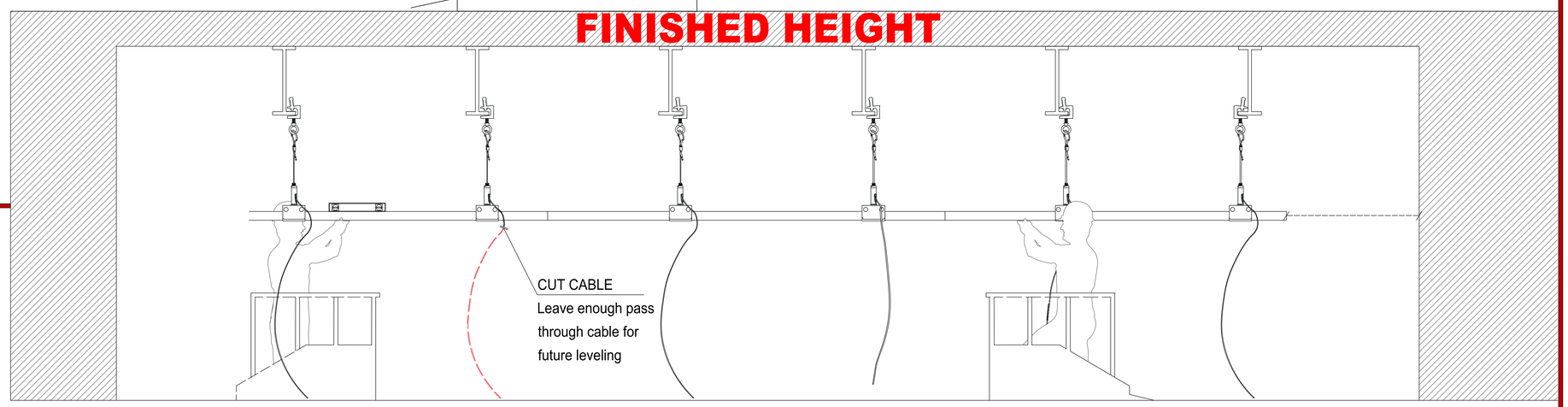


# STEP 2

## INSERT JOINERS

ATTACH JOINERS TO EACH END OF CONNECTING busSTRUT

**JOINERS (M-JB)**
Joiners are used to mechanically and electrically connect individual busSTRUT lengths.

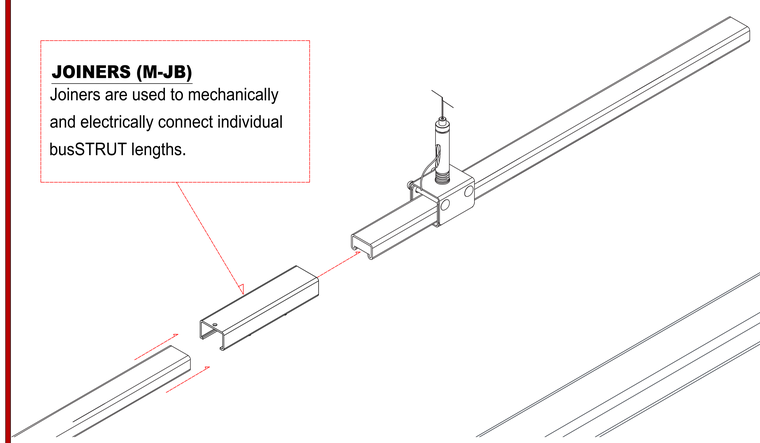

## TIGHTEN JOINERS

TIGHTEN SET SCREWS ON THE BOTTOM OF THE JOINER

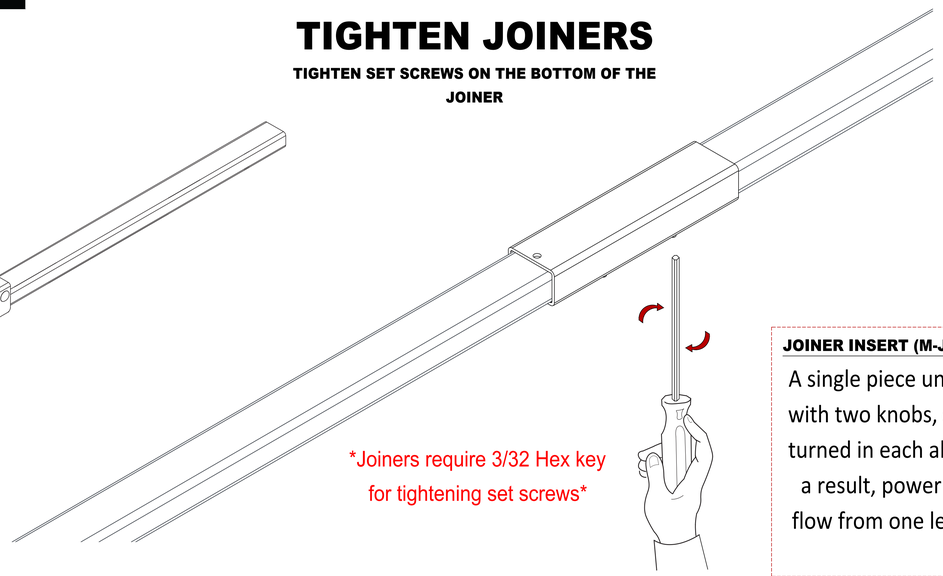

*Joiners require 3/32 Hex key for tightening set screws*

**JOINER INSERT (M-JI-X)**
A single piece unit that is installed with two knobs, one must be fully turned in each abutting length. As a result, power can continue to flow from one length to the next.

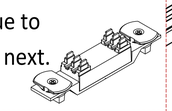

## ATTACH INSERT

ATTACH JOINERS TO EACH END OF CONNECTING busSTRUT

Line up center of insert with etched centerline on joiner sleeve

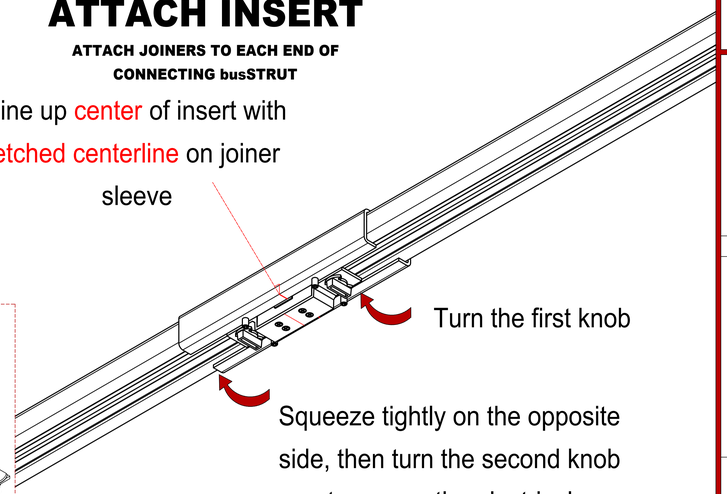

Turn the first knob

Squeeze tightly on the opposite side, then turn the second knob to secure the electrical connection.

**Installation Instruction Guidelines are provided only as that, informative guidelines. Defer to architectural/engineering drawings tailored to the specific project.


bS
busSTRUT
805 Hillsdowne Road
Suite C
Westerville, OH
43081
TEL: 614.933.8695
E-MAIL: INFO@busSTRUT.COM
WWW.busSTRUT.COM


PRINCIPAL IN CHARGE: LARRY GELLERT
CHECKED BY: JOHN LOCH
DRAWN BY: JOHN LOCH
ISSUE DATE: 10/15/2024
ISSUED FOR: BID/REVIEW

TYPICAL
busSTRUT Installation Instructions

busSTRUT
**SHOP DRAWING SET(ONLY)**
NOT A REPLACEMENT FOR ARCHITECTURAL / ENGINEERING OR ELECTRICAL DRAWINGS

| NO. | DATE | REVISION DESCRIPTION | BY |
|---|---|---|---|
| A | XX-XX-XX | XXXX | XX |

PAPER SIZE: ARCH E (48x36)
NOT TO SCALE
DRAWING NUMBER
E-b01

# STEP 3

## INSTALLING CROSSOVERS

## DROPPING ON

Crosssovers can be dropped onto suspended busSTRUT to create an intersection with a perpendicular run of busSTRUT.

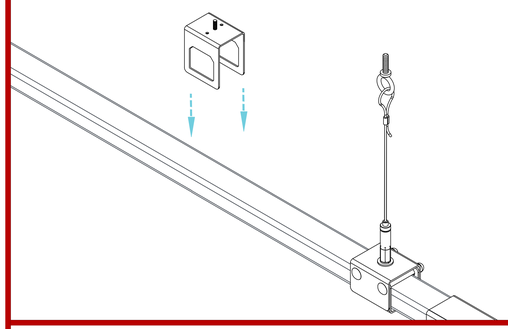

Slide perpendicular runs of busSTRUT through the crossover and tighten the set screws.

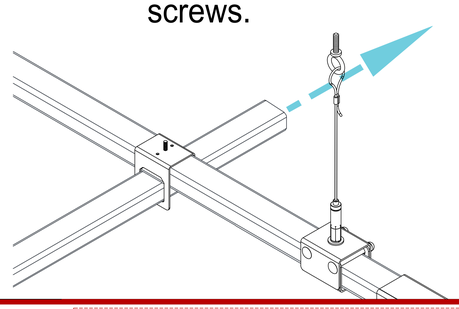

## SLIDING ON

Crosssovers can be slid into position and lifted to create perpendicular bridges.

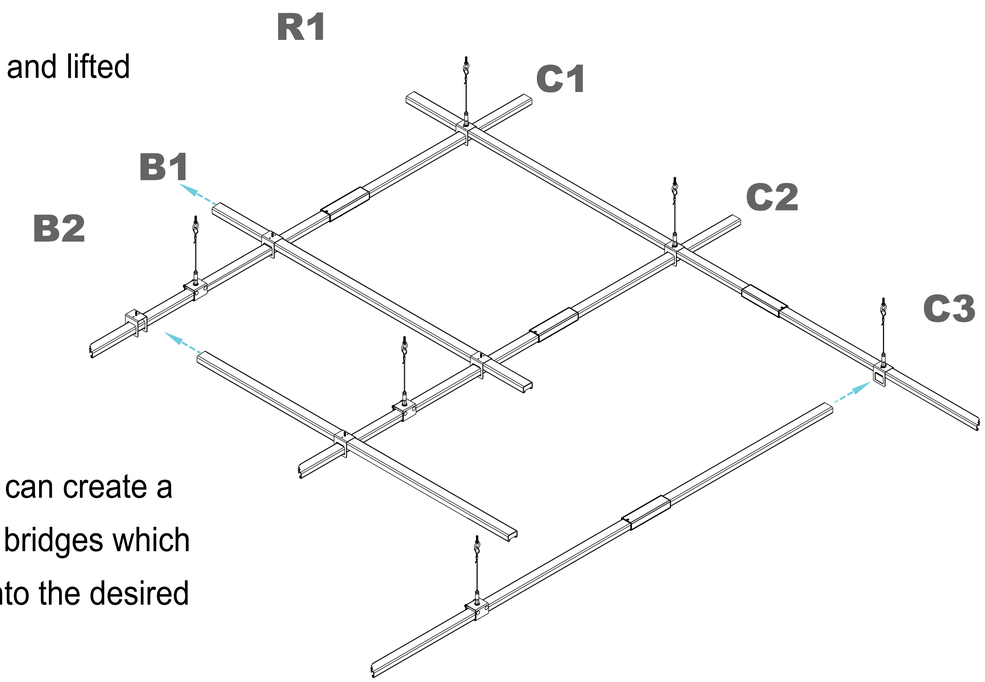


Perpendicular runs can create a full grid or be short bridges which are easily moved into the desired position.

# STEP 4A

## SLIMLINE JUMPER

Make sure that the slimline crossover is tightened before attaching the slimline jumper.

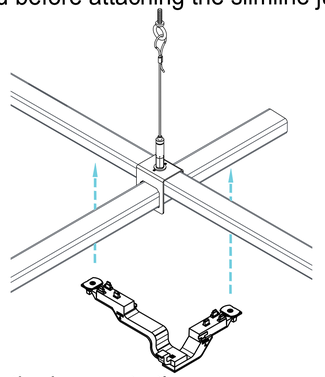

First, clip the jumper to the crossover.

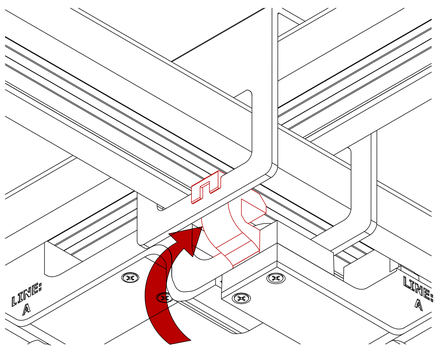

**SLIMLINE JUMPER (MD2020-UNIV-IJ2-B-X)**

A single piece unit that is installed with two knobs, one must be fully turned in each abutting length. As a result, power can continue to flow from one length to the next.

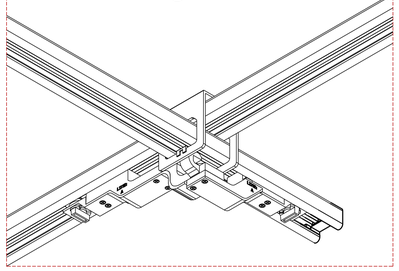

Seat the jumper into the busSTRUT by squeezing tightly on one side and turning the knob. Then, turn the other knob to complete the circuit.

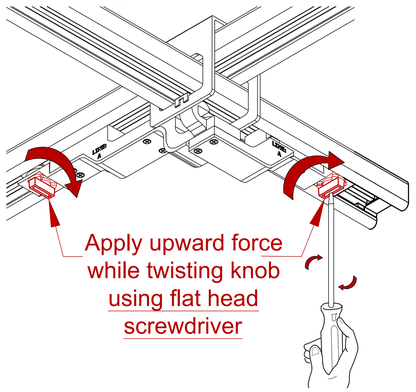


# STEP 4B

## LINE FEEDS

Install line feeds on busSTRUT to power the configuration.

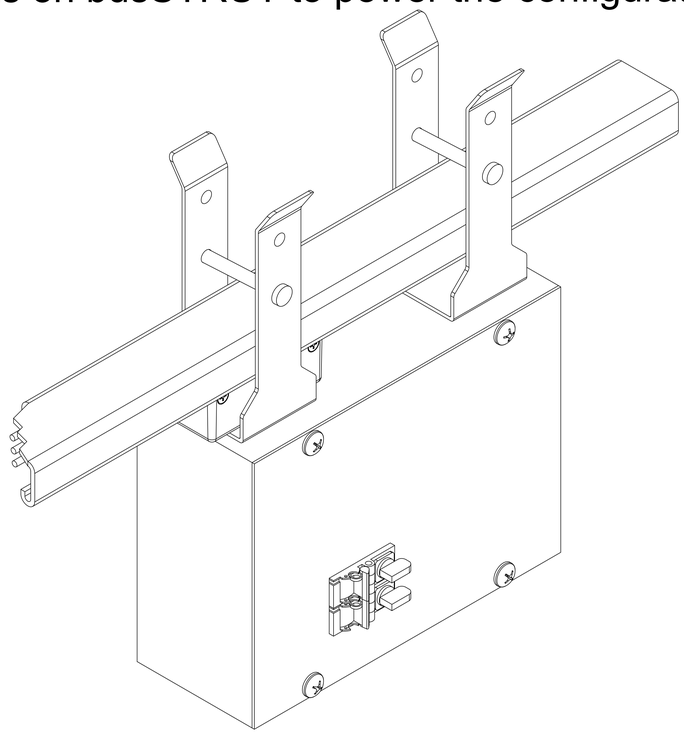

## 20A LINE FEED

Shown on single decked busSTRUT

**Installation Instruction Guidelines are provided only as that, informative guidelines. Defer to architectural/engineering drawings tailored to the specific project.


bS busSTRUT
805 Hillsdowne Road
Suite C
Westerville, OH
43081
TEL: 614.933.8695
E-MAIL:
INFO@busSTRUT.COM
WWW.busSTRUT.COM


PRINCIPAL IN CHARGE: LARRY GELLERT
CHECKED BY: JOHN LOCH
DRAWN BY: JOHN LOCH
ISSUE DATE: 10/15/2024
ISSUED FOR: BID/REVIEW

TYPICAL busSTRUT Installation Instructions

busSTRUT
SHOP DRAWING SET(ONLY)
NOT A REPLACEMENT FOR ARCHITECTURAL / ENGINEERING OR ELECTRICAL DRAWINGS

| NO. | DATE | REVISION DESCRIPTION | BY |
|---|---|---|---|
| 1 | XX-XX-XX | XXXX | XX |

PAPER SIZE: ARCH E (48x36)
NOT TO SCALE
DRAWING NUMBER
E-b02

# busSTRUT Parts

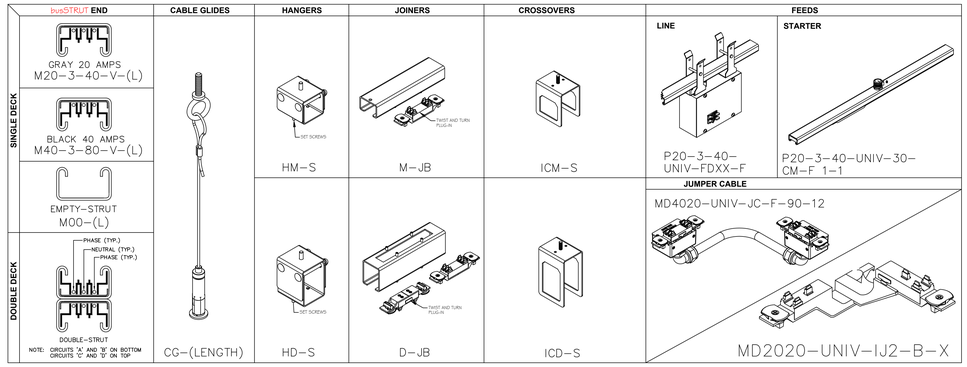


busSTRUT: 12 gauge 1" x 1" x 1-5/8" STEEL busSTRUT features two Hot wires symmetrically surrounding a center Neutral. The result, two 20 Amp circuits 40 Amps Maximum with busSTRUT/20; alternatively two 40 Amp circuits 80 Amps Maximum with busSTRUT/40. 2.5', 5', 10', and 20' lengths. Rated for up to 277/480V. Double decks with standard hardware for trunking.

**BRAIDED CABLE with GLIDE:** For use with busSTRUT Hangers/Crossovers. Includes cable-glide and cable with factory assembled cable looped threaded 1/4-20" eye bolt.

**HANGERS:** Single and Double Hangers are for use with busSTRUT. Each is an assembled two-part unit. The upper piece includes a threaded stud for use with busSTRUT cable-glide.

**JOINERS:** Single and Double are for use with busSTRUT. Lengths are joined together mechanically with the 8" steel sleeve. Electrical Joiner-Kits include both a Twist & Turn Plug-In electrical insert to bridge power. And continuous grounding exists through the bus itself by means of a permanently affixed copper grounding bar.

**CROSSOVERS:** For use with intersecting busSTRUT. Each is an assembled two-part unit for building grid configurations and bridges . The upper piece includes a threaded stud for use with busSTRUT cable-glide.

**JUMPERS:** For use with both busSTRUT/20 and busSTRUT/40. The fused 40/20 Jumper Cables can be used to electrically connect busSTRUT/40 Trunks to busSTRUT/20 Branches and/or electrically connecting busSTRUT/20 to busSTRUT/20.

**LINE FEEDS:** For use with powering single-decked busSTRUT. Junction Box features energy code type "limiters" (breakers/fuse holders) and 3 Pole Fitters. Available up to 277/480V. Can be positioned anywhere along busSTRUT to reduce the lengths of homeruns.

**STARTER FEEDS:** For use with powering single-decked busSTRUT. Utilized when no current limiting is required on the busSTRUT. Must be positioned at the beginning of a run.

# Lights

# Bill of Materials

busSTRUT **Bill of Materials**

**ROWS Large Design**

| | |
|---|---|
| Drawn By | John Loch |
| Checked By | John Loch |
| Date | 10/15/2024 |

| R/C | Amps | LF | BF | 2.5 | 3 | 5 | 7 | M | INS | NE-INS | M | C-GI | 1/1 | 12" | INVS | JK | 30ST | 40 | GEN | ACT |
|---|---|---|---|---|---|---|---|---|---|---|---|---|---|---|---|---|---|---|---|---|
| | | busSTRUT LENGTHS | | | | | | busSTRUT Hardware | | | | | | | busSTRUT POWER | | | | | |
| | | busSTRUT 20 | | | | | | Joiners | | | Hangers | C-GI | Xover | Jcord | | Line | | | GEN | ACT |
| | | M20-3-40-277-2.5-F-2B | M20-3-40-277-3-F-2B | M20-3-40-277-5-F-2B | M20-3-40-277-7-F-2B | SINGLE M-JB-F-X | JOINER INSERT M-JI-F-X | NON-ELECTRIC JOINER INSERT M-JI-F-NE | SINGLE HM-S-F-ST-LFX | CG-E-15-B-GL | ICM-S-F-ST-X | JUMP CORD MD4020-UNIV-JCF-90-12-GO2 | MD2020-UNIV-IJ2-F-X | P20-3-40-UNIV-JK-NB-F | STARTER FEED CENTER MOUNT P20-3-40-UNIV-30-CM-F 1-1 | Breakered P40-3-60-UNIV-FD-F | | | |
| **Rows** | | | | | | | | | | | | | | | | | | | | |
| R1 | 20 | 15 | 15 | 1 | 1 | | 1 | 3 | 3 | | 1 | 3 | 2 | | | | 1 | | | 4 |
| R2 | 20 | 15 | 15 | | 1 | 1 | 1 | 2 | 2 | | 1 | 3 | 2 | | 1 | | | | | 4 |
| R3 | 20 | 15 | 15 | | 1 | 1 | 1 | 2 | 2 | | 1 | 3 | 2 | | 1 | | | | | 4 |
| R4 | 20 | 15 | 15 | | 1 | 1 | 1 | 2 | 2 | | 1 | 3 | 2 | | 1 | | | | | 4 |
| R5 | 20 | 15 | 15 | | 1 | 1 | 1 | 2 | 2 | | 1 | 3 | 2 | | 1 | | | | | 4 |
| **SUB TOTAL** | | **75** | **75** | **1** | **5** | **4** | **5** | **11** | **11** | | **5** | **15** | **10** | | **4** | | **1** | | | **20** |
| **R/C** | **Amps** | **LF** | **BF** | **2.5** | **3** | **5** | **7** | **M** | **INS** | **NE-INS** | **M** | **C-GI** | **1/1** | **12"** | **INVS** | **JK** | **30ST** | **40** | **WW** | **LUCY** |
| **Columns** | | | | | | | | | | | | | | | | | | | | |
| C1 | 20 | 30 | 30 | | 3 | | 3 | 5 | 5 | | | | | | 1 | | | | | 8 |
| C2 | 20 | 30 | 30 | | 3 | | 3 | 5 | 5 | | | | | | 1 | | | | | 6 |
| **SUB TOTAL** | | **60** | **60** | | **6** | | **6** | **10** | **10** | | | | | | **2** | | | | | **14** |
| **STORE TOTAL** | | **135.0** | **135.0** | **1** | **11** | **4** | **11** | **21** | **21** | | **5** | **15** | **10** | | **6** | | **1** | | | **34** |

# Labor Hours

**busSTRUT** provides time-tested standard labor hours per part, which are then multiplied by the project's Bill of Materials.

busSTRUT **LABOR**

| | ITEMS | Qty. | U/M | | STANDARDIZED LABOR HOURS min | hrs 60 | | TOTAL HRS |
|---|---|---|---|---|---|---|---|---|
| busSTRUT SYSTEM | LENGTHS | 135 | LF | x | 2.75 | 0.05 | = | 6 |
| | JOINERS | 21 | EA | x | 12 | 0.20 | = | 4 |
| | HANGERS | 15 | EA | x | 25 | 0.42 | = | 6 |
| | CROSSOVERS | 10 | EA | x | 10 | 0.17 | = | 2 |
| | ATTACHMENTS | | EA | x | 8 | 0.13 | = | 0 |
| | JUMPERS | 6 | EA | x | 6 | 0.10 | = | 1 |
| | FEEDS | 1 | EA | x | 15 | 0.25 | = | 0 |
| | busSTRUT SUB-TOTAL | | | | | | = | 19 |
| FIXTURES | ACCENT | 34 | EA | x | 8 | 0.13 | = | 5 |
| | LINEARS | | EA | x | 20 | 0.33 | = | 0 |
| | busSTRUT READY LIGHTS SUB-TOTAL | | | | | | = | 5 |
| | TOTAL TIME | | | | | | = | 24 |

**busSTRUT** system is designed to be BID separately.

Bid from the **feeds-in**.

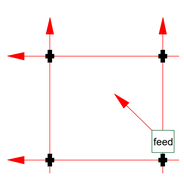


* Powered by a minimal amount of feed boxes.

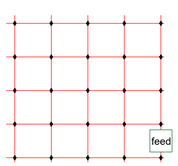


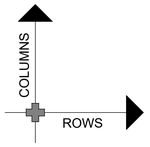


# Legend

- busSTRUT 20 / Single Deck
- 30" Starter Feed
- Joiner
- 1/1 Slimline Crossover
- Slimline Jumper

# Lighting Plan

**busSTRUT**

**LIGHTING PLAN ONLY**

THIS DRAWING IS MEANT TO SHOW THE LOCATION OF busSTRUT **LIGHTS ONLY.** IT IS NOT A REPLACEMENT FOR: ARCHITECTURAL / ENGINEERING / ELECTRICAL SPECIFICATIONS. (SEE THEIR DRAWINGS)

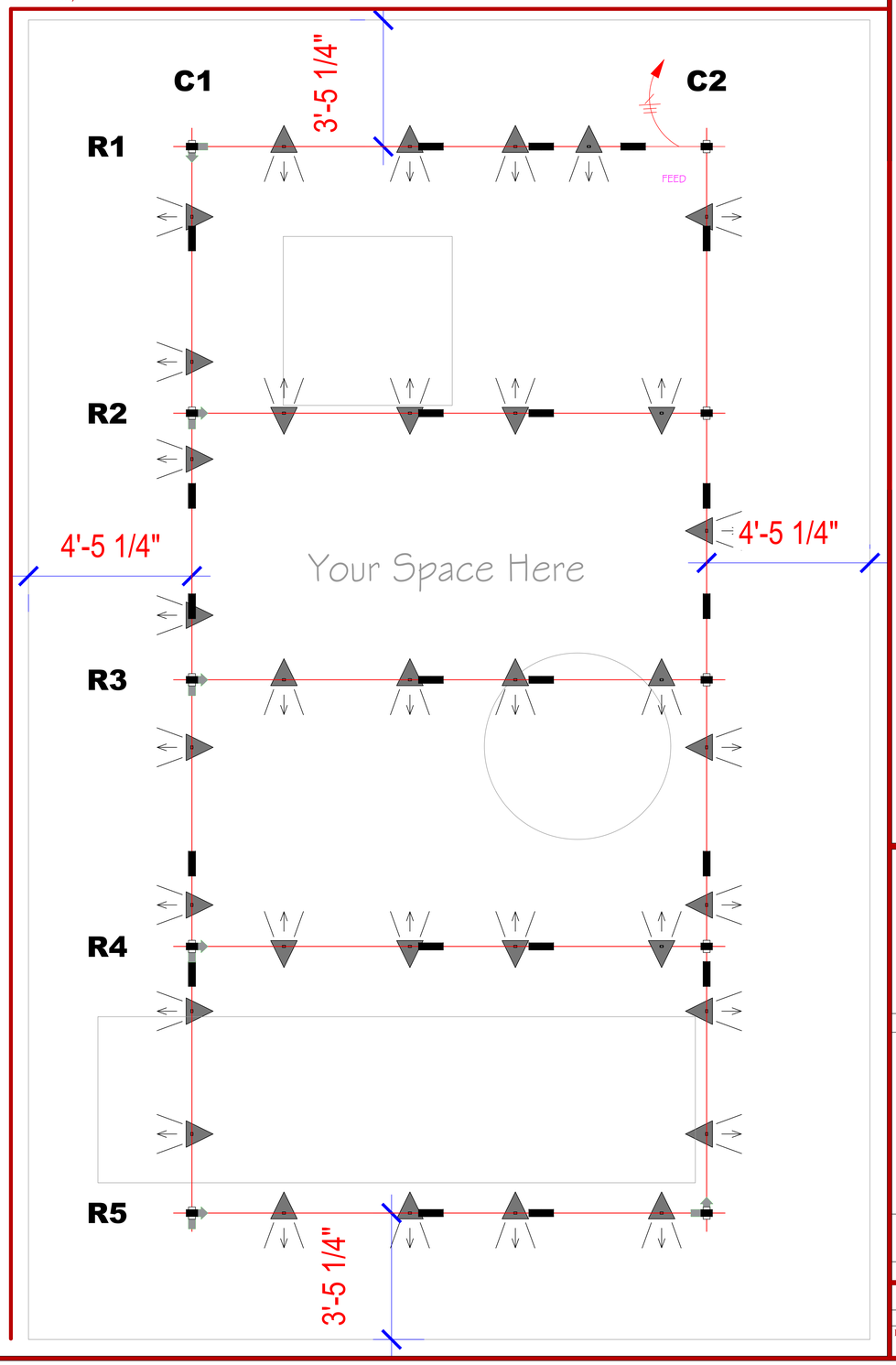



busSTRUT
805 Hillsdowne Road
Suite C
Westerville, OH
43081
TEL: 614.933.8695
E-MAIL:
INFO@busSTRUT.COM
WWW.busSTRUT.COM


PRINCIPAL IN CHARGE: LARRY GELLERT
CHECKED BY: JOHN LOCH
DRAWN BY: JOHN LOCH
ISSUE DATE: 10/15/2024
ISSUED FOR: BID/REVIEW

Lighting Plan & Bill of Materials
Rectangle Grid

busSTRUT
**SHOP DRAWING SET(ONLY)**
NOT A REPLACEMENT FOR ARCHITECTURAL / ENGINEERING OR ELECTRICAL DRAWINGS

| NO. | DATE | REVISION DESCRIPTION | BY |
|---|---|---|---|
| | XX-XX-XX | XXXX | XX |

PAPER SIZE: ARCH E (48x36)
SCALE 3/4" = 1'-0"
DRAWING NUMBER
E-b1

# Mounting Rules

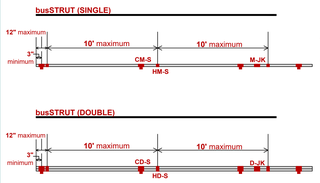


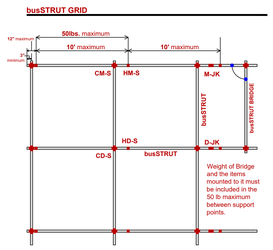


**WARNING**
**DO NOT** FIELD-CUT OR PAINT busSTRUT. FACTORY FINISH HAS BEEN ENGINEERED AND APPLIED TO ENSURE SAFE ELECTRICAL GROUNDING. REFINISHING busSTRUT MAY DESTROY ELECTRICAL GROUNDING CAUSING AN ***UNSAFE*** CONDITION.

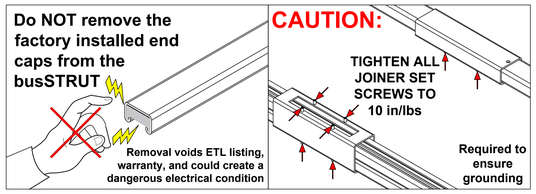


CONNECTION TO STRUCTURE BY OTHERS

**DISTANCE:**

**10'** MAXIMUM 10' spacing between support points

**12"** Support point must be within 12" from every end or corner

**3"** MINIMUM 3" of busSTRUT to be exposed beyond end of mounting hangers and/or crossovers

**WEIGHT:**

**50 lbs** Maximum 50 pounds between support points
(include weight of busSTRUT System)
**Weight of 1 foot of busSTRUT:**
**Single (MIN) - 1.5 lb per Linear Foot** (not including connected weight)
**Double (MAX) - 3 lb per Linear Foot** (not including connected weight)

**FITTERS**

**40 lbs** The busSTRUT Flip-Fitters (with metal bracket) are rated for 40 lbs maximum static, vertical load.
Flip-Fitters without metal bracket are for use with standard track light fixtures only. Consult for maximum weight restrictions.

Only busSTRUT fittings and hardware may be mounted directly to busSTRUT.

**CONNECTION TO STRUCTURE BY OTHERS**
Attachment from busSTRUT System to structure must be engineered and installed to properly support the entire suspended weight.

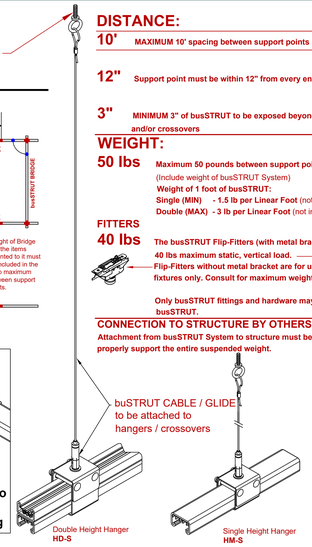


# Legend

| | |
|---|---|
| | busSTRUT 20 / Single Deck |
| 30" FEED | 30" Starter Feed |
| | Joiner |
| | 1/1 Slimline Crossover |
| | Slimline Jumper |

# Project Specific Rules

Rows are to be mounted on top of Columns.
Crossover sleeve runs with Rows.

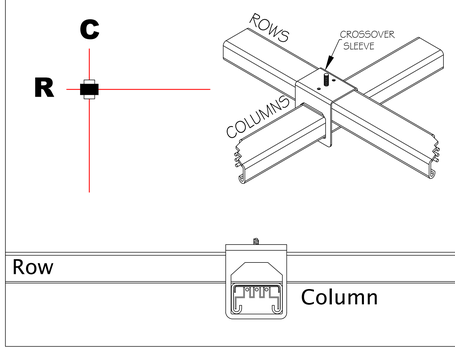


**busSTRUT Lengths Used in this Project**

- 2.5'
- 3'
- 5'
- 7'

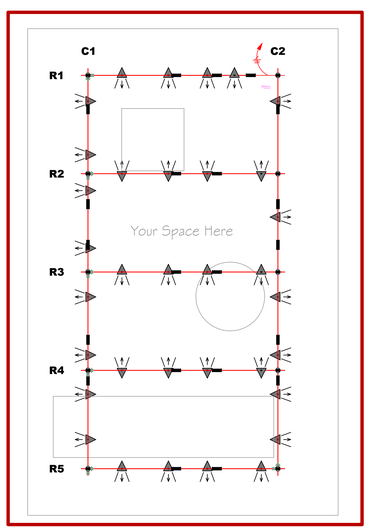


# ISO Details

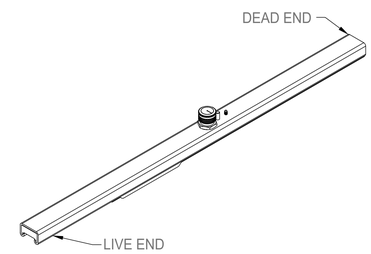


**A** 30" STARTER FEED
N.T.S.

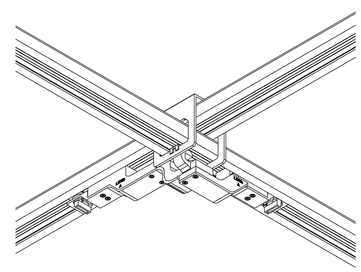

**B** SLIMLINE JUMPER at 1/1 CROSSOVER
N.T.S.

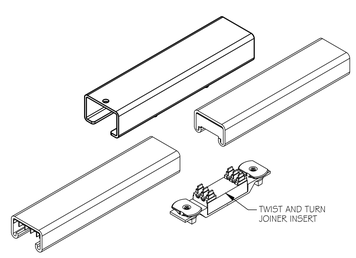


**C** SINGLE JOINER w/ JOINER INSERT
N.T.S.

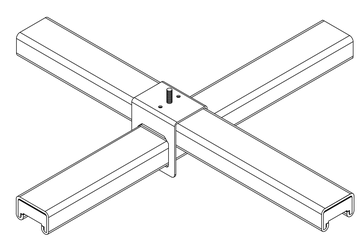

**D** SLIMLINE 1/1 CROSSOVER
N.T.S.

# Dimensions

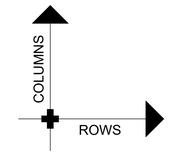


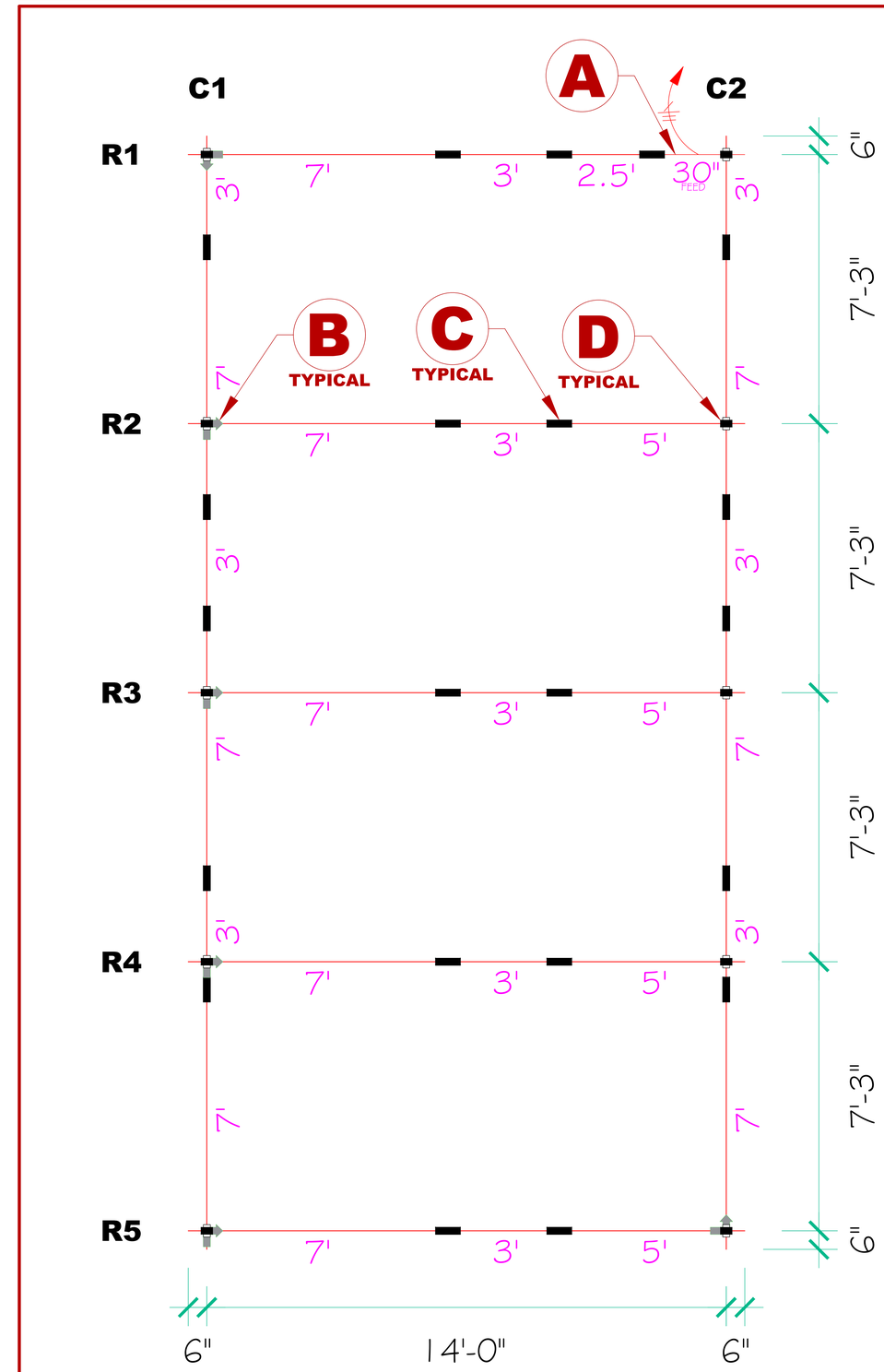


busSTRUT
805 Hillsdowne Road
Suite C
Westerville, OH
43081
TEL: 614.933.8695
E-MAIL:
INFO@busSTRUT.COM
WWW.busSTRUT.COM

PRINCIPAL IN CHARGE: LARRY GELLERT
CHECKED BY: JOHN LOCH
DRAWN BY: JOHN LOCH
ISSUE DATE: 10/15/2024
ISSUED FOR: BID/REVIEW

# Assembly Plan
Rectangle Grid

busSTRUT
**SHOP DRAWING SET(ONLY)**
NOT A REPLACEMENT FOR ARCHITECTURAL/ ENGINEERING OR ELECTRICAL DRAWINGS

| NO. | DATE | REVISION DESCRIPTION | BY |
|---|---|---|---|
| 1 | XX-XX-XX | XXXX | XX |

PAPER SIZE: ARCH E (48x36)
SCALE 3/4" = 1'-0"
DRAWING NUMBER
**E-b2**